PT30- 42_3

AC versus DC in crane modernisation projects

TM GE Automation Systems, Salem, VA, USA

Introduction

In the late 1980s several companies introduced IGBT-based AC drive products. Due to its rather demanding control requirements, the crane industry has been slow to adopt AC technology. However, today virtually all new container cranes are AC, and there is a lot of debate on which way to go in modernising the large fleet of legacy DC cranes. This article provides the tools to make an informed choice between AC and DC for your next crane modernisation project.

DC/AC crane control configurations

To understand the DC crane modernisation options, a review of both the DC and AC drive configurations for a typical quay crane is useful. Figure 1 provides a one-line diagram for a DC quay crane.

Relevant points in a DC drive configuration:

- The two hoist motors are normally wired in series and controlled with one DC drive.
- The gantry motors are usually wired in both series and parallel and controlled with one DC drive. The parallel configuration of the gantry motors has an inherent anti-slip function. When a given wheel begins to slip, the increased counter EMF pushes more current/torque to the wheels that are not slipping.
- DC drives have a power factor of 0.3-0.7, based on the loading of the drives.

A current AC drive configuration is shown in Figure 2, including a converter, inverters that control each of the crane's motions, and an integral DC bus.

Relevant points in the AC drive configuration:

- The two hoist motors have dedicated inverters, a requirement with AC technology.
- The gantry motors must be wired in a parallel configuration. These motors are specified to have 3 per cent slip versus the normal 1 per cent slip, to address the case where all of the gantry wheels may not be exactly the same size.
- Power factor in an AC is a nearly constant 0.96.
- In contrast with the DC system, inactive motor fluxing is not possible.
- A reactive filter upstream of the converter is a popular option to minimise harmonic distortion fed back into the power system.

Shared motion

To save cost and space in drive equipment, both DC and AC systems use a shared motion concept, where two or more motors share a common drive (see Figure 3). The scheme works because the motions being shared are mutually exclusive of one another and the power requirements of the two motor groups are roughly equivalent.

When the operator transitions from one motion to another, the master controller sequences the motor contactors and commands the drive to switch parameter sets. This normally takes 1-2 seconds. The drive maintains a set of parameters for each motion.

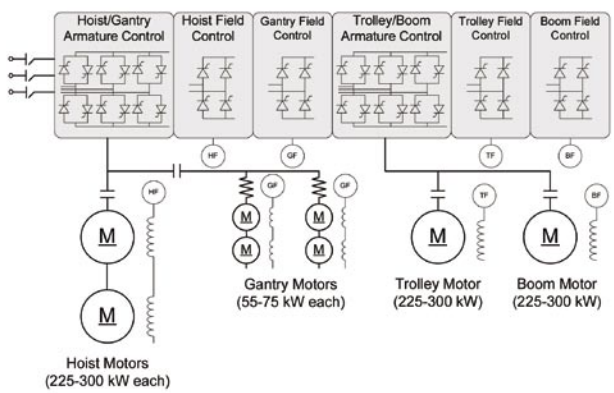

Figure 1. DC drive one-line diagram for a quay crane.

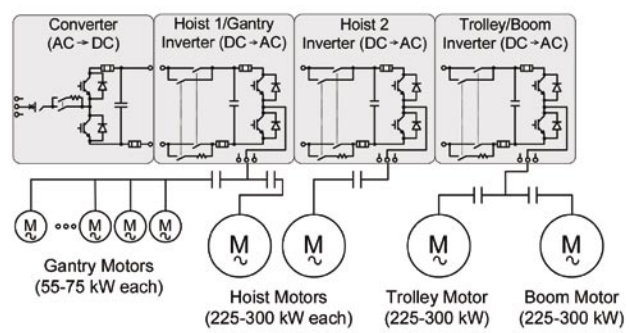

Figure 2. AC drive one-line diagram for a quay crane.

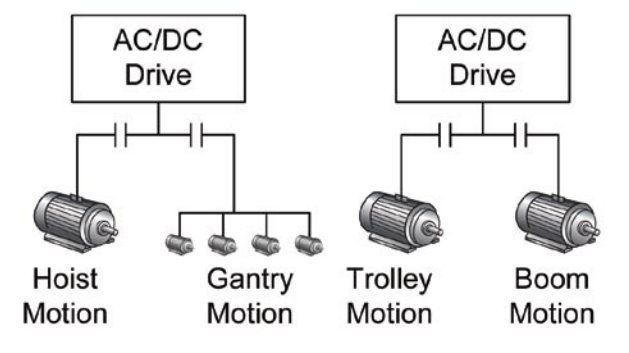

Figure 3. Shared motion concept.

In DC crane modernisation projects, shared motion has several implications:

- DC motors have dedicated power supplies for their field magnetising current; thus, they are always fluxed. For example, when transitioning between the hoist and gantry motions, there is no requirement to pre-flux the motor. This is in contrast with the AC system, where inactive motors are not fluxed. Thus,

TABLE 1: SUMMARY OF THE DIFFERENCES BETWEEN AC AND DC TECHNOLOGY

Item	AC Drive System (Assumes Common DC Bus Configuration)	DC Drive System
Power Factor	Nearly constant: > 0.96	Variable: 0.3 to 0.7
Required kVA	1.11-1.25 kVA / kW	1.4 – 3.0 kVA / kW when there is no power factor correction equipment
Line Disturbances	Tolerant of dips and disturbances, capacitors in the DC bus system provide energy storage to ride through brief dips in line voltage. Additionally, the control of the IGBTs is not as dependent on the incoming power as thyristors.	Not tolerant of dips or disturbances. Drive shuts down and power bridge maintenance may be required.
Harmonic Generation	> 1.5 kHz; optional harmonic filter can be installed	250Hz- 1kHz

when making this same transition from a hoist to gantry motion in an AC system, there is an additional 500-1,000 milliseconds required to pre-flux the gantry motors.

- Since one drive controls more than one motor, in a modernisation project, taking just one motion from DC to AC does not work. For example, if the hoist motion is going to be transitioned to AC, the gantry motion will also have to be taken to AC.
- In a DC system, the hoist motors can be wired in series from a common drive. This cannot be done with AC technology; each of the hoist motors must have its own dedicated inverter. In a modernisation project, this will result in possible space problems as well as significant rewiring.

Comparison points to evaluate AC versus DC technology

The following sections cover additional factors to consider when comparing AC with DC technology for your DC modernisation project.

Hoist speed range

The torque characteristics of a DC motor above base speed are different from those of an AC induction motor (see Figure 4). Above base speed, the DC machine's torque ramps down inversely proportional to the speed. With an AC induction motor above base speed, the available torque comes down inversely proportional with the square of the speed. This results in different speed ranges for these motors in hoist applications:

Hoist Motor	Speed Range
DC	3.2 : 1
AC Induction	1.5 : 1

The reason for this difference has to do with the different processes used for generating field flux between the DC and AC induction motors. A DC machine has its field independently excited from the armature. An AC induction machine's field is generated from the stator current, which ramps down as the motor goes beyond base speed.

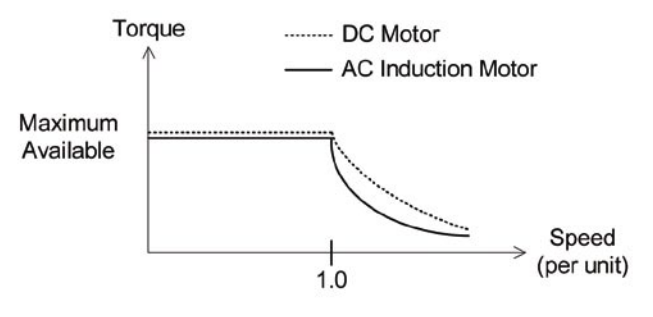

Figure 4. Torque versus speed curve for an AC and DC hoist motor.

In crane operation, the motor normally operates above base speed, so the control is constantly managing these speed/torque curves, working to provide the required torque at the maximum speed the motor can achieve. The relatively narrow speed range of AC induction motors forces the application of a larger machine than what would be used in a DC crane.

Power factor

DC drive power bridges use thyristors to rectify AC power. Similar to an inductive load, thyristors generate lagging current (see Figure 5). When current lags voltage in a circuit, reactive VARs are created that do not perform any real work, but are charged for nonetheless.

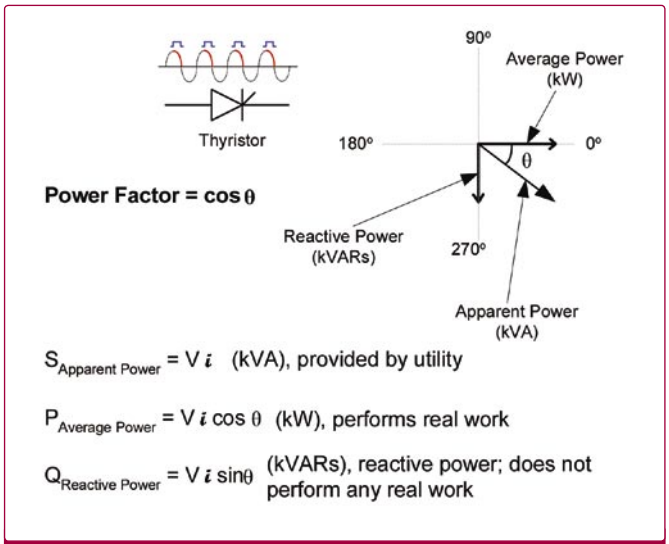

Figure 5. Displacement power factor.

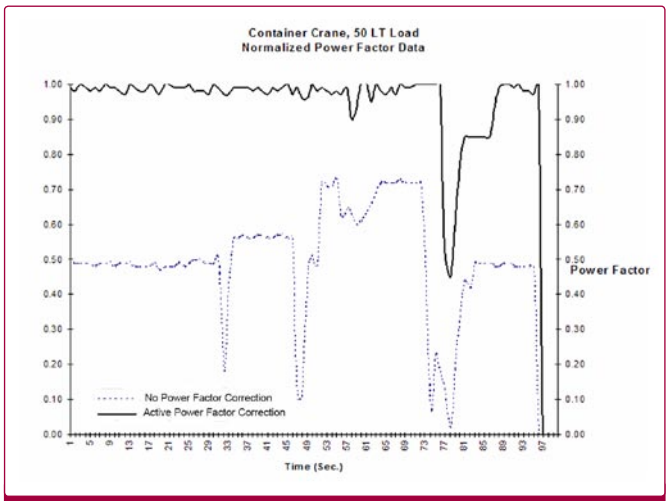

Figure 6. Plot of power factor before and after power factor correction equipment was installed.

PT30- 42_3

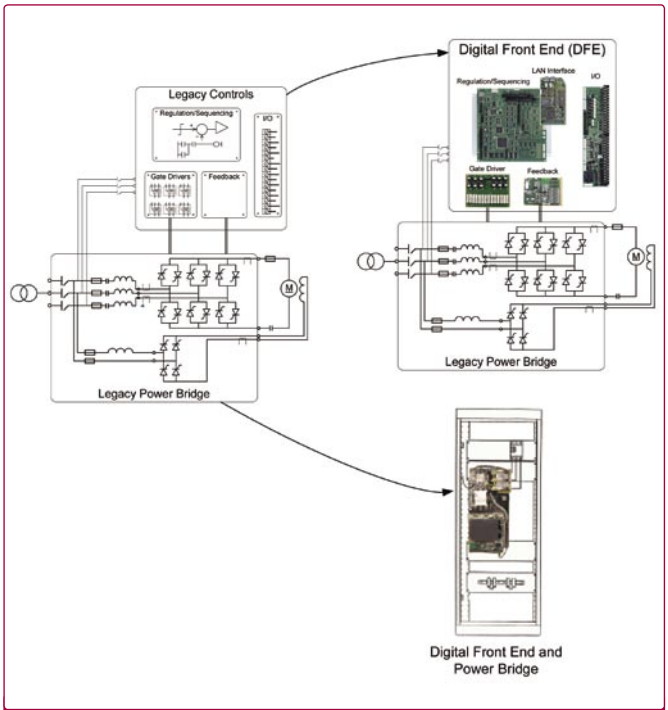

Figure 7. DC drive modernization options.

Utility companies penalise customers for a lagging power factor. Typically, to avoid a penalty, an average of power factor 0.9 lagging over a 15-minute demand period must be maintained. In some cases, the utility will penalise customers for instantaneous reactive VAR demands.

This issue can be addressed with power factor correction equipment. A common approach currently being used is applying an IGBT-based converter that includes heavy-duty capacitors and microprocessor controls.

These packages allow the power factor to be regulated to ensure utility specifications are met. Another approach to resolve this issue is to use AC drives, because they maintain a relatively constant power factor greater than 0.96. Figure 6 provides a real-world plot of power factor for a DC system before and after power factor correction equipment was installed.

Power source considerations

Stiff power sources are not necessarily a given in crane applications, and there are differences between AC and DC technology in this area. The Table 1 provides a summary of the differences.

DC drive modernization options

Instead of completely replacing the DC motor, drive, and cabling with AC technology, several vendors offer DC drive modernization packages. Figure 7 illustrates two approaches:

- A digital front end (DFE) that replaces the legacy drive controls. This approach addresses the obsolescence of drive circuit boards, while preserving the legacy power bridge, motor cabling, and DC motor.
- A DC module modernisation that replaces the legacy drive controls and power bridge, keeping the cabinet, motor cabling, and motor. This form of drive modernisation opens up the opportunity to increase drive capacity, update the controls, and preserve the legacy motor cabling and DC motor.

Both of these approaches keep the crane outage to one to two weeks, as contrasted with a transition to AC that would take the crane out of commission for more than a month. Moving to AC technology typically requires:

- Replacement of motors and associated mechanical issues
- Replacement of motor cabling
- Replacement of drives
- Rework of interface with master controller

Conclusion

In new crane construction, AC technology certainly has advantages over DC. However, transitioning an existing DC crane to AC is a significantly larger project than modernising the legacy DC technology, in both time and scope of equipment.

ABOUT THE COMPANY

TM GE Automation Systems is a joint venture between Toshiba, Mitsubishi-Electric, and General Electric in the industrial system drives business. The companies came together in 2000, to create an organisation of 2,200 people with annual sales in excess of $1B. It is built upon the combined and proud heritage of these great companies. They focus on delivering customer success – every project, every time.

ENQUIRIES

Javier Rizo
Marketing Manager
TM-GE Automation Systems LLC

Tel: +1 540 387 7357
E-mail: javier.rizo@tmeic-ge.com
Website: www.tmge.com